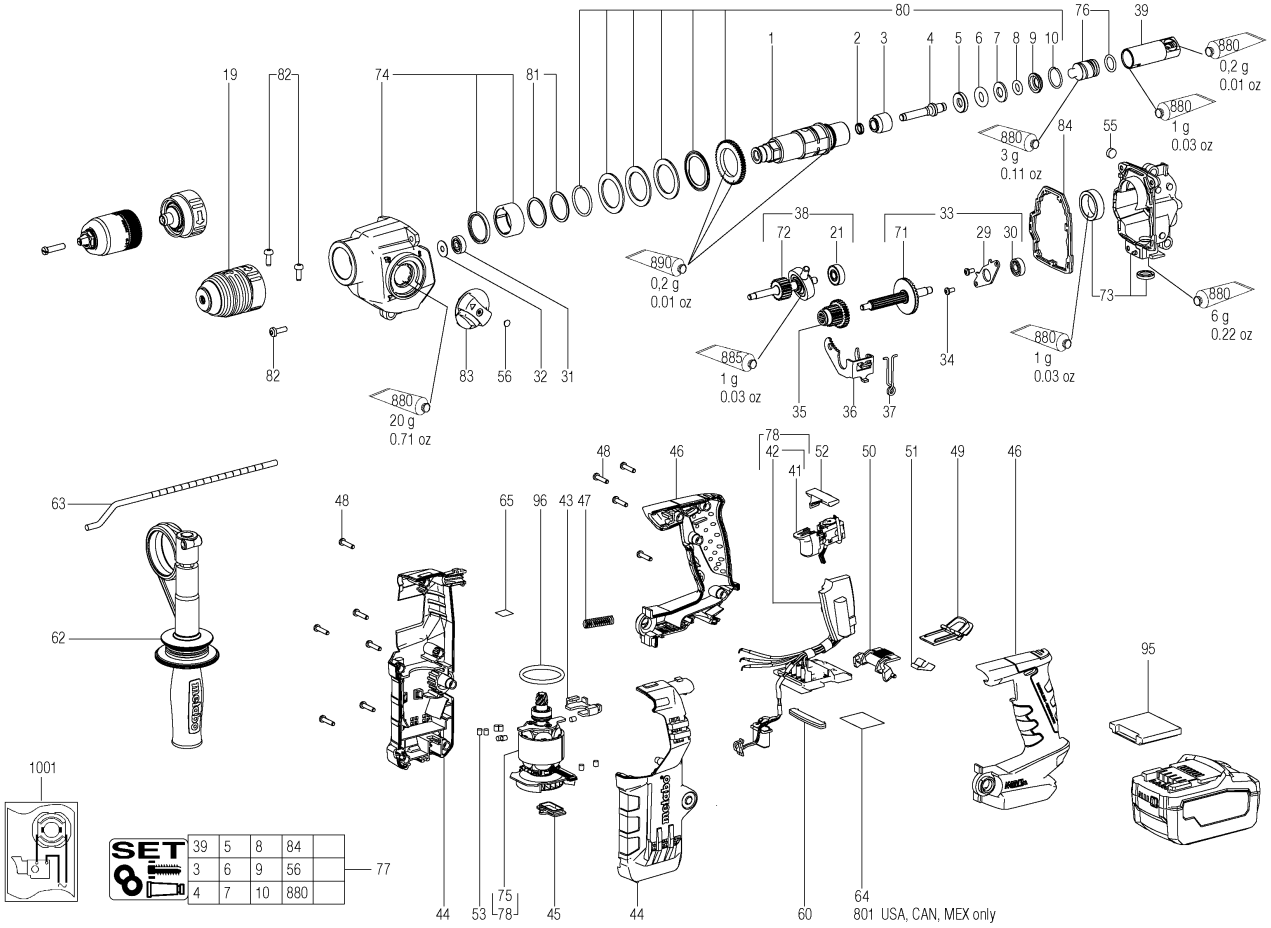
80
76
39
880
0,2 g
0.01 oz
880
1 g
0.03 oz
880
3 g
0.11 oz
84
55
19
82
74
81
1
2
3
4
5
6
7
8
9
10
38
33
72
21
71
29
30
890
0,2 g
0.01 oz
73
880
6 g
0.22 oz
885
1 g
0.03 oz
880
1 g
0.03 oz
34
82
83
56
32
31
880
20 g
0.71 oz
35
36
37
78
42
41
52
50
51
49
46
48
46
63
48
65
96
43
47
62
95
1001
SET
39
5
8
84
3
6
9
56
4
7
10
880
77
44
53
75
78
45
44
60
64
801 USA, CAN, MEX only

Position	Amount	Type number	Description	PG
1	1	341212060	Drill driving sleeve	34
2	1	143195200	Shaft sealing ring	13
3	1	341006030	Bushing	18
4	1	341210120	Piston	21
5	1	341013180	Support ring	14
6	1	143195150	O-ring	12
7	1	339007190	Washer	11
8	1	143195210	O-ring	11
9	1	341058950	Catching sleeve	15
10	1	141181840	Circlip	11
19	1	316071590	Removable chuck	28
21	1	143110030	Ball bearing, 7x22x7	22
29	1	339137540	Fixed bearing cover	11
30	1	143116070	Ball bearing, 7x19x6	14
31	1	143115690	Ball bearing,6x19x6	13
32	1	141150530	Cup spring	12
33	1	316065720	Intermediate shaft compl.	33
34	2	141119570	Fill. head screw(DIN 7985)	11
35	1	340004610	Sliding block	20
36	1	339137550	Shift fork	14
37	1	342022480	leg spring	14
38	1	316065730	Shaft compl.	34
39	1	341212070	exciter sleeve compl.	25
41	1	343412620	poti-switch DX13-1001	20
42	1	316071010	Electronic unit with software,KHA 18 LT	49
43	1	339137580	Fixed bearing cover	13
44	1	343439420	Motor housing w.cover	25
45	1	344102000	Rubber cap	12
46	1	343439430	Handle half w.cover	29
47	1	342004130	Pressure spring	11
48	10	141116020	Self-tap fill h screw	12
49	1	343439440	Release Bracket	12
50	1	343439450	Locking piece	12
51	1	342051090	Flat spring	11
52	1	343433260	Switch slide,R/L	11
53	6	344097580	Rubber plug	11
55	1	344070670	Felt seal	11
56	1	343376750	Seal	12
60	1	344102140	rubber buffer	11
62	1	314001380	Support handle compl.	26
63	1	341511630	Depth stop	16
64	1	338068430	Rating plate	12
65	1	338129940	Indication label	12
71	1	316065650	Intermediate shaft compl.	32
72	1	316065660	Shaft compl.	34
73	1	316065670	Gear housing rear compl.	33
74	1	316065680	Gear housing front compl.	34
75	1	316065690	Motor compl.,18 V	54
76	1	316065700	Striker cpl.	25
77	1	316065710	Maintenance kit	37
78	1	316071020	motor compl.,with elektronic	56
80	1	316065640	Drill driving sleeve compl.	42

Position	Amount	Type number	Description	PG
81	2	339007960	Washer	11
82	3	141124830	Fillister head screw	11
83	1	316064490	Control knob compl.	17
84	1	344101960	SEAL	13
95	1	343439680	Cover cap	11
96	1	143194970	O-ring 5 X 1,2	17
801	1	338077070	Rating plate	12
880	1	344130800	Grease FG 126	26
885	1	344131210	Tube Grease,50g Klueber Microlube GL 261	28
890	1	344130560	Grease SF 011 50Gr 1,8oz	30
1001	1	338506360	Wiring diagram	

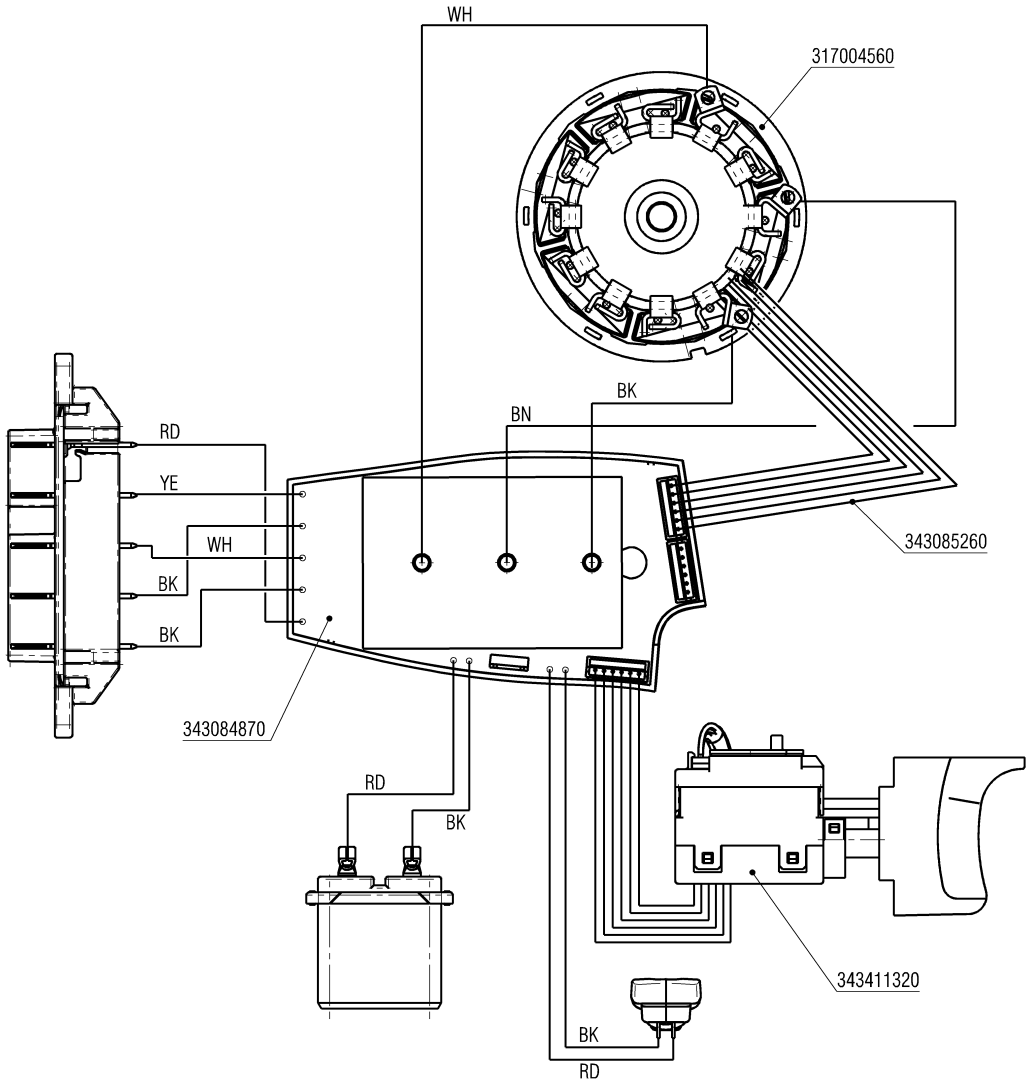
WH
317004560
BK
BN
RD
YE
WH
BK
BK
343085260
343084870
RD
BK
343411320
BK
RD