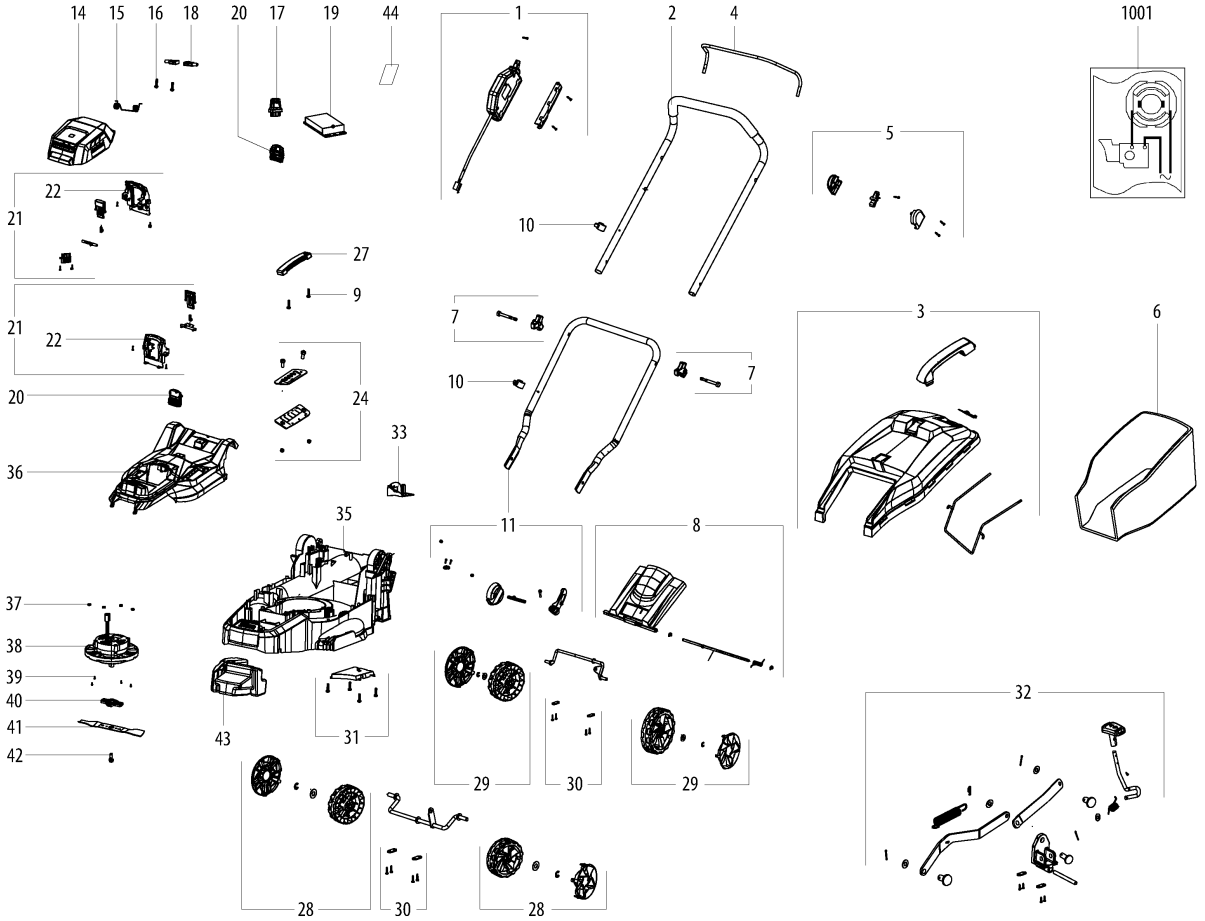
14
15
16
18
20
17
19
44
1
2
4
1001
5
22
21
10
27
9
7
3
6
21
22
10
7
20
24
33
36
35
11
8
37
38
39
40
41
42
43
31
32
29
30
29
28
30
28

Position	Amount	Type number	Description	PG
1	1	316073270	Switch box cpl.	28
2	1	343456430	Handle cover top	28
3	1	343456420	Grass bag cpl.	30
4	1	343456440	Strap	17
5	1	316080380	Holder compl.	12
6	1	343456500	Grass bag	14
7	2	316073300	Star knob cpl.	11
8	1	316073310	Flap cpl.	18
9	2	341704850	Screw,ST 4,2x15 TX20	11
10	2	343456510	Cable Holder	11
11	2	316073340	Fixation comp.	28
14	1	343455510	flap cover	21
15	1	342023970	Big Torque Spring	11
16	2	141118730	Self-tap. fill. h. screw	11
17	1	343089510	backup key	13
18	2	343456520	Pin	11
19	1	343089490	Speed button unit	41
20	2	344533510	plug	29
21	2	343455530	Holder plate	17
22	2	316067540	Contact pin carrier with locking	20
24	1	343456450	cover f. height adjustement	15
27	1	343456530	Handle	12
28	1	316073350	Wheel front cpl.	19
29	1	316073360	Wheel rear cpl.	21
30	2	343456460	FASTENER f. axis	11
31	1	343456470	hood	12
32	1	316073280	HEIGHT-ADJUSTMENT cpl.	26
33	1	343456480	Insert	15
35	1	343456490	Housing Bottom	32
36	1	343455500	Housing Upper	25
37	4	341102700	5mm NUT(5mm ID.)	11
38	1	316073330	Motor compl.	48
39	4	141110280	Hexagon head screw	11
40	1	343456540	Holder f. knife	11
41	1	628422000	Mower blade 36 cm	
42	1	341705650	Screw f. knife	11
43	1	339141240	counter balance	21
44	1	338076280	Rating plate	11
1001	1	338510810	Diagram	

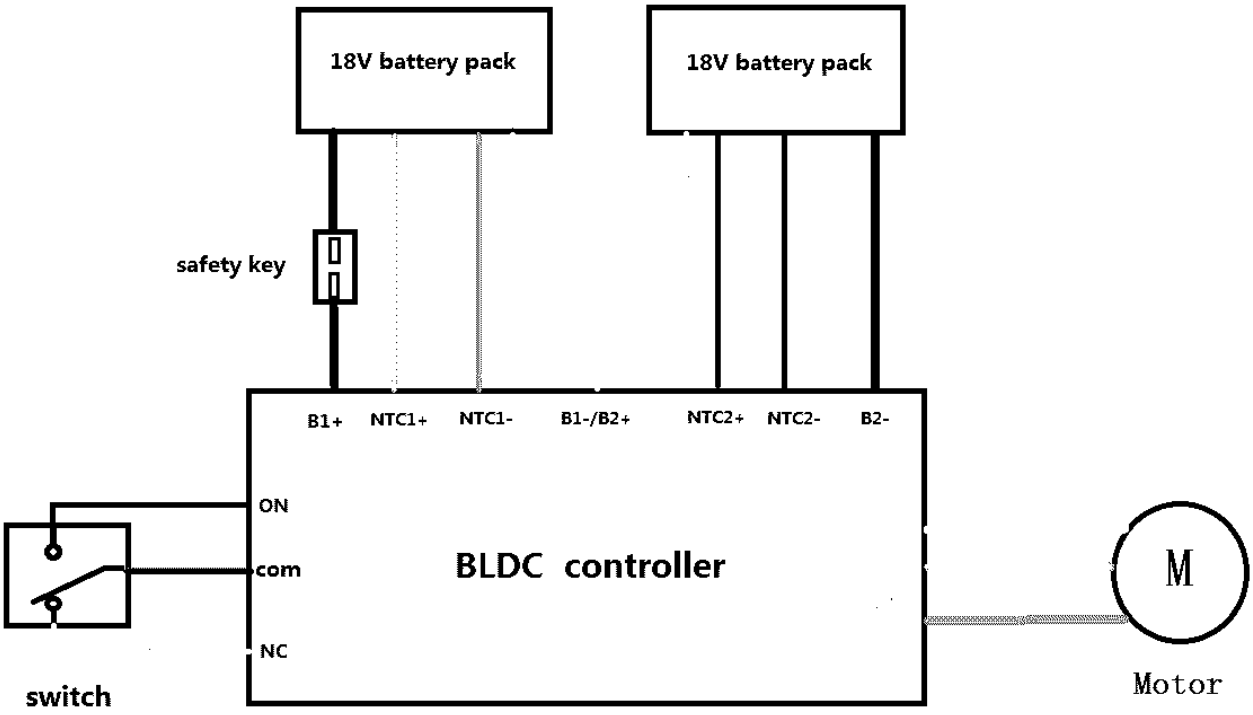
18V battery pack
18V battery pack
safety key
B1+
NTC1+
NTC1-
B1-/B2+
NTC2+
NTC2-
B2-
ON
com
NC
BLDC controller
switch
M
Motor